Heated seats, heated steering wheel

From 2004 m. y.

Notes:

Informations for

- Relay and fuse arrangement
- Connector arrangement
- Control units and relays
- Ground connections

⇒ Component Locations!

Informations for

- Troubleshooting Procedures

⇒ Guided fault finding

Protected by copyright. Copying for private or commercial purposes, in part or in whole, is not permitted unless authorised by AUDI AG. AUDI AG does not guarantee or accept any liability with respect to the correctness of information in this document. Copyright by AUDI AG.

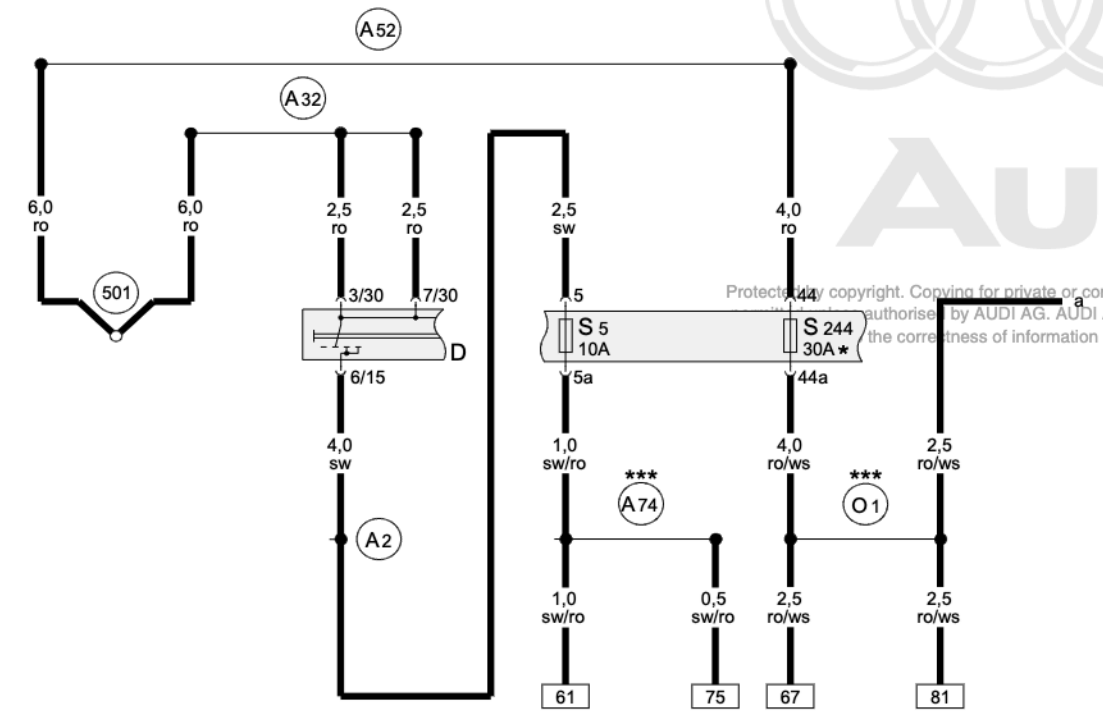

Fuses

D	Ignition/Starter Switch
S5	Fuse (on fuse/relay panel)
S244	Fuse (on fuse panel)
501	Threaded Connection 2 - terminal 30 (on relay panel)
A2	Plus Connection (15) (in instrument panel wiring harness)
A32	Plus Connection (30) (in instrument panel wiring harness)
A52	Plus Connection 2 (30) (in instrument panel wiring harness)
A74	Connection (15a - Fuse 5 (in instrument panel wiring harness)
O1	Plus Connection (30) (in heated seats wiring harness)
*	Fuse increased from 20A to 30A, from 2006 m.y.
***	with heated seat's rear only

Protected by copyright. Copying for private or commercial purposes, in part or in whole, is not permitted unless authorised by AUDI AG. AUDI AG does not guarantee or accept any liability with respect to the correctness of information in this document. Copyright by AUDI AG.

ws	=	white
sw	=	black
ro	=	red
br	=	brown
gn	=	green
bl	=	blue
gr	=	grey
li	=	lilac
ge	=	yellow
or	=	orange
rs	=	pink

1 2 3 4 5 6 7 8 9 10 11 12 13 14

8E0–039020406

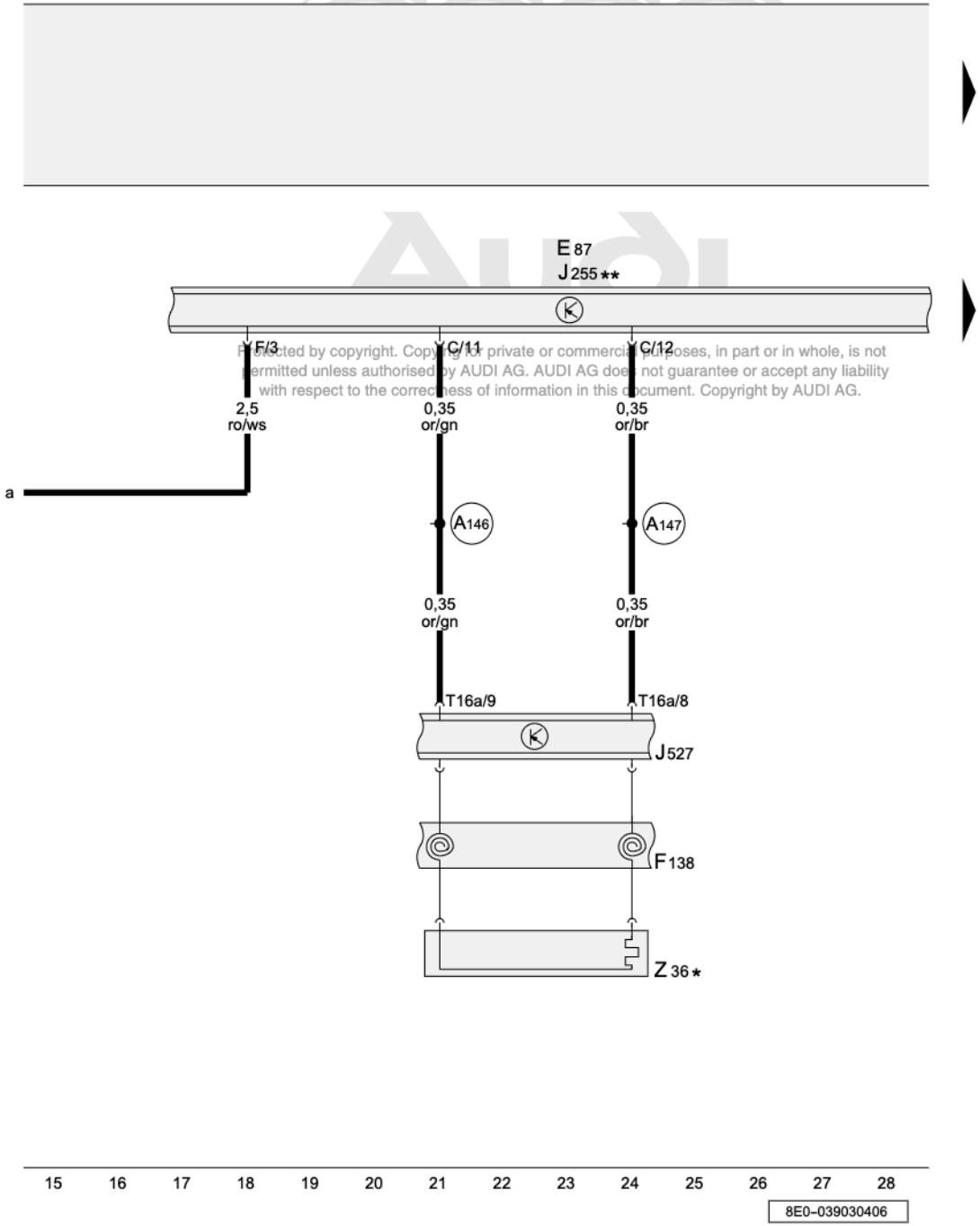

Protected by copyright. Copying for private or commercial purposes, in part or in whole, is not permitted unless authorised by AUDI AG. AUDI AG does not guarantee or accept any liability with respect to the correctness of information in this document. Copyright by AUDI AG.

Heated Steering Wheel

E87	A/C Control Head
F138	Airbag Spiral Spring/Return Spring With Slip Ring
J255	Climatronic Control Module
J527	Steering Column Electronic Systems Control Module
T16a	16-Pin Connector, black, on steering Column Electronic Systems Control Module
Z36	Heated Steering Wheel
A146	Comfort System High-Bus Connection (in instrument panel wiring harness)
A147	Comfort System Low-Bus Connection (in instrument panel wiring harness)
*	with Heater steering wheel only
**	from August 2004

ws	=	white
sw	=	black
ro	=	red
br	=	brown
gn	=	green
bl	=	blue
gr	=	grey
li	=	lilac
ge	=	yellow
or	=	orange
rs	=	pink

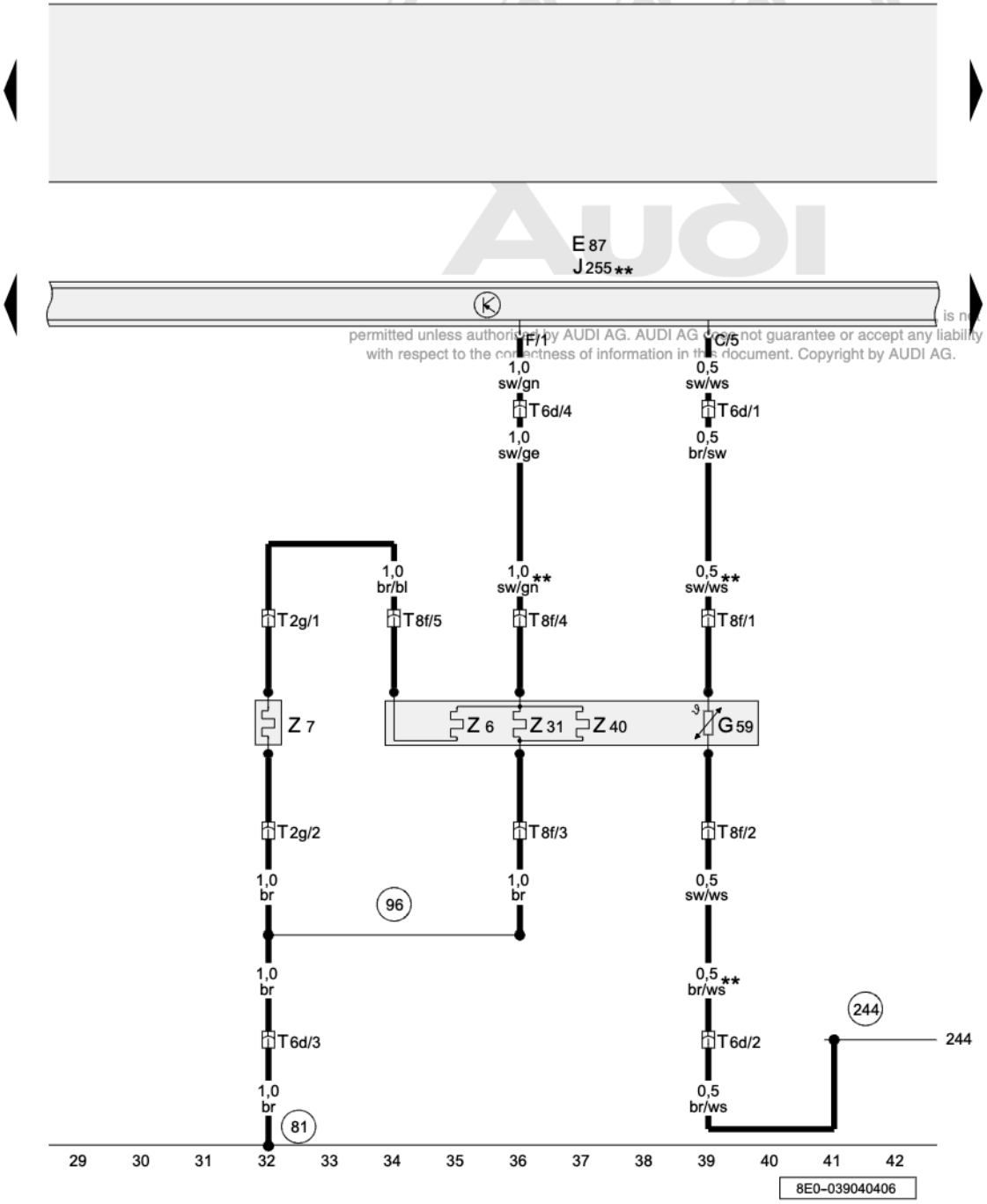

is not permitted unless authorised by AUDI AG. AUDI AG does not guarantee or accept any liability with respect to the correctness of information in this document. Copyright by AUDI AG.

Driver's Seat Heating Element

E87	A/C Control Head
G59	Driver's Heated Seat Temperature Sensor
J255	Climatronic Control Module
T2g	Double Connector, on driver's Seat for driver's Backrest Heating Element
T6d	6-Pin Connector, green, seat wiring connector station, driver's seat
T8f	8-Pin Connector, on driver's seat for driver's seat Heating Element
Z6	Driver's Seat Heating Element
Z7	Driver's Backrest Heating Element
Z31	Driver's Seat Side Bolster Heater
Z40	Driver's Seat Side Bolster Heater 2
81	Ground Connection 1 (in instrument panel wiring harness)
96	Ground Connection 1 (in heated seats wiring harness)
244	Sensor Ground Connection (in Climatronic wiring harness)
**	from August 2004

ws	=	white
sw	=	black
ro	=	red
br	=	brown
gn	=	green
bl	=	blue
gr	=	grey
li	=	lilac
ge	=	yellow
or	=	orange
rs	=	pink

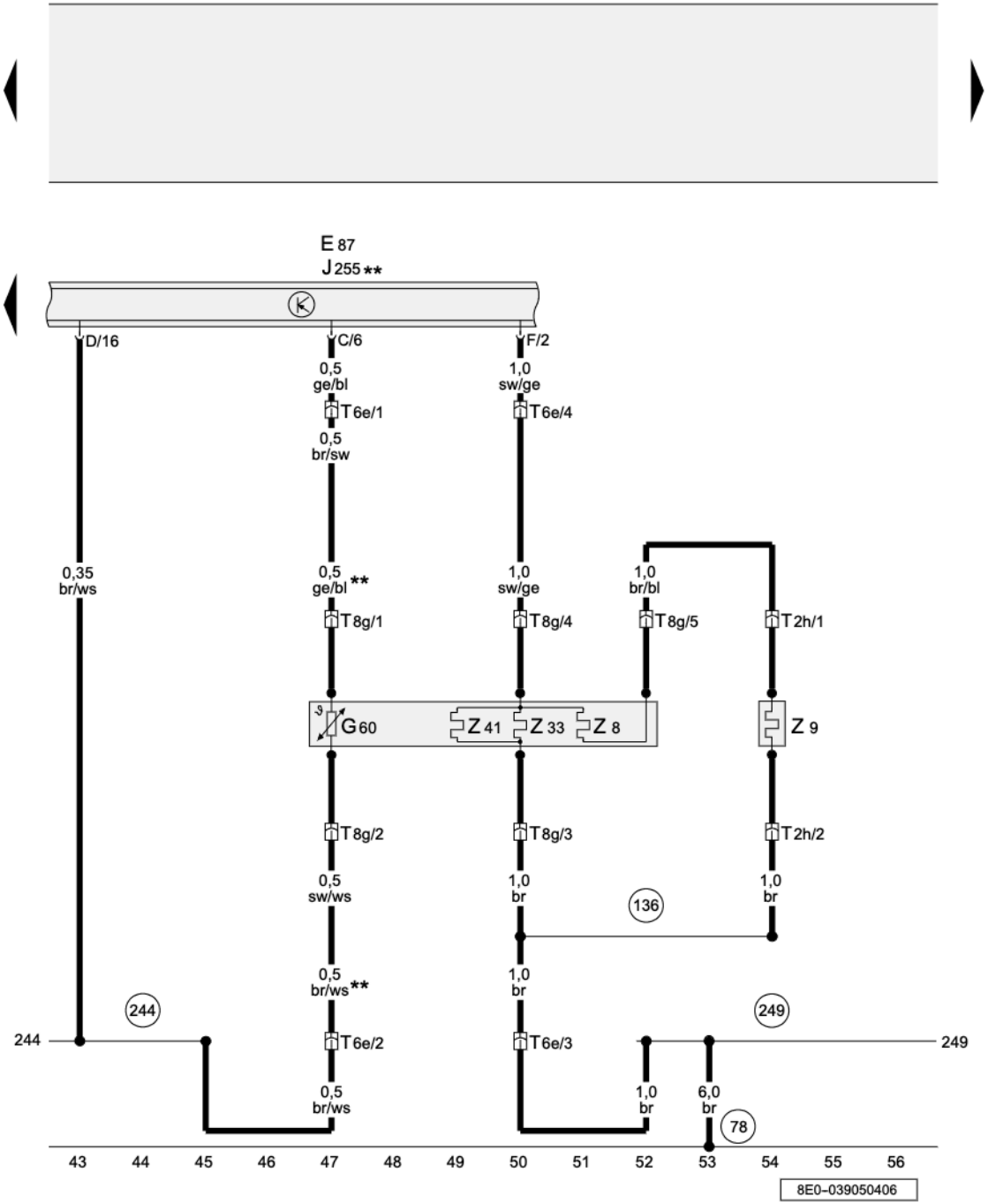

Front Passenger's Seat Heating Element

E87	A/C Control Head
G60	Front Passenger's Heated Seat Temperature Sensor
J255	Climatronic Control Module
T2h	Double Connector, black, on passenger's Seat for driver's Backrest Heating Element
T6e	6-Pin Connector, green, seat wiring connector station, passenger seat
T8g	8-Pin Connector, on passenger's seat for passenger's seat Heating Element
Z8	Front Passenger's Seat Heating Element
Z9	Front Passenger's Backrest Heating Element
Z33	Front Passenger's Seat Side Bolster Heater
Z41	Front Passenger's Seat Side Bolster Heater 2
78	Ground Connection (on right lower B-pillar)
136	Ground Connection 2 (in heated seats wiring harness)
244	Sensor Ground Connection (in Climatronic wiring harness)
249	Ground Connection 2 (in interior wiring harness)
**	from August 2004

Protected by copyright. Copying for private or commercial purposes, in part or in whole, is not permitted unless authorised by AUDI AG. AUDI AG does not guarantee or accept any liability with respect to the correctness of information in this document. Copyright by AUDI AG.

ws	=	white
sw	=	black
ro	=	red
br	=	brown
gn	=	green
bl	=	blue
gr	=	grey
li	=	lilac
ge	=	yellow
or	=	orange
rs	=	pink

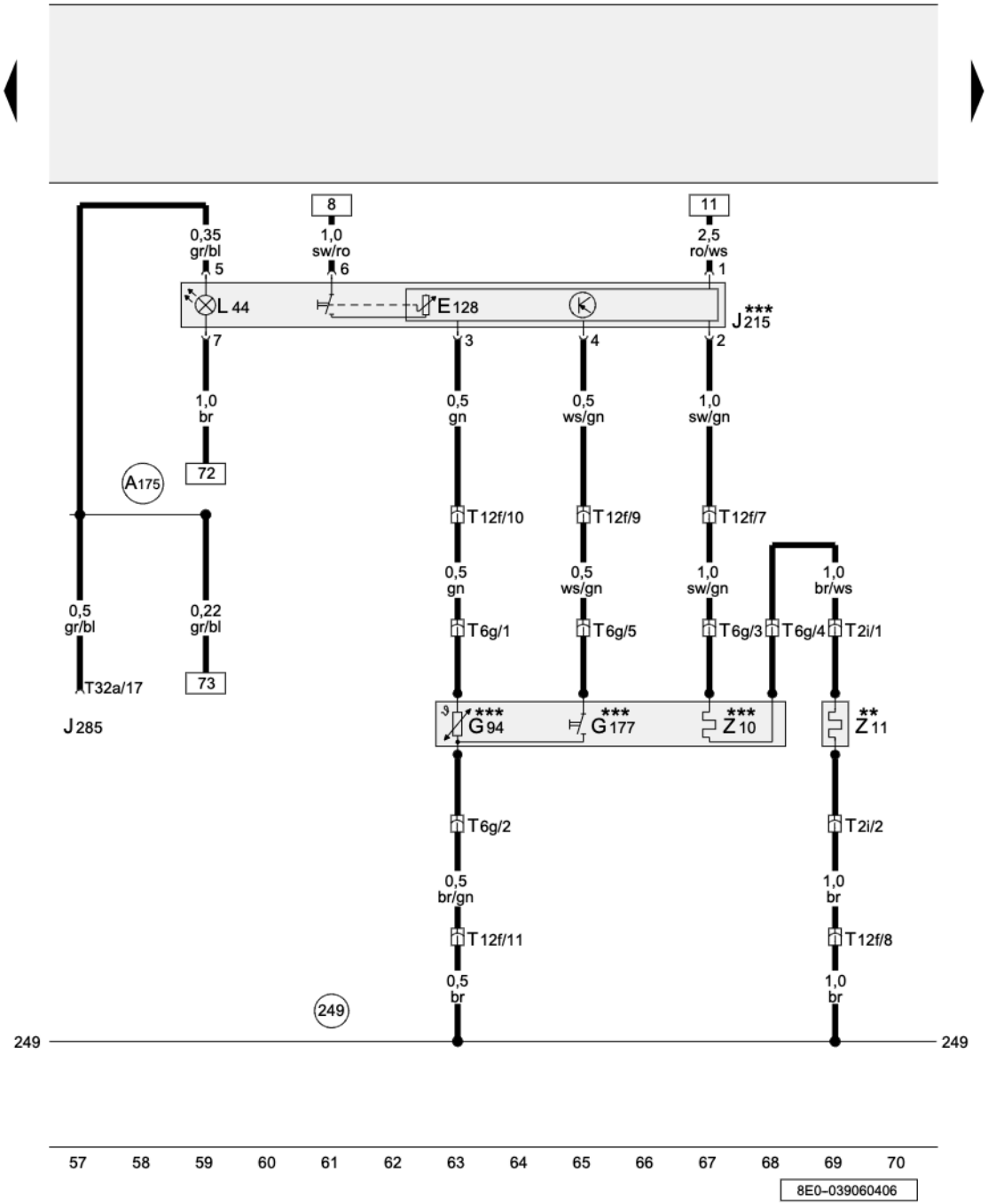

Left Rear Seat Heating Element

E128	Left Rear Heated Seat Regulating Switch
G94	Left Rear Heated Seat Temperature Sensor
G177	Rear Seat Occupied Sensor (on driver's side)
J215	Left Rear Heated Seat Control Module
J285	Instrument Cluster Control Module
L44	Heated Seat Switch Illumination
T2i	Double Connector, on Left Rear Backrest Heating Element
T6g	6-Pin Connector, on left rear seat
T12f	12-Pin Connector, black, under rear seat
T32a	32-Pin Connector, green, on instrument panel insert
Z10	Left Rear Seat Heating Element
Z11	Left Rear Backrest Heating Element
249	Ground Connection 2 (in interior wiring harness)
A175	Connection (58s) (in instrument panel wiring harness)
***	with heated seat's rear only

Protected by copyright. Copying for private or commercial purposes, in part or in whole, is not permitted unless authorised by AUDI AG. AUDI AG does not guarantee or accept any liability with respect to the correctness of information in this document. Copyright by AUDI AG.

ws	=	white
sw	=	black
ro	=	red
br	=	brown
gn	=	green
bl	=	blue
gr	=	grey
li	=	lilac
ge	=	yellow
or	=	orange
rs	=	pink

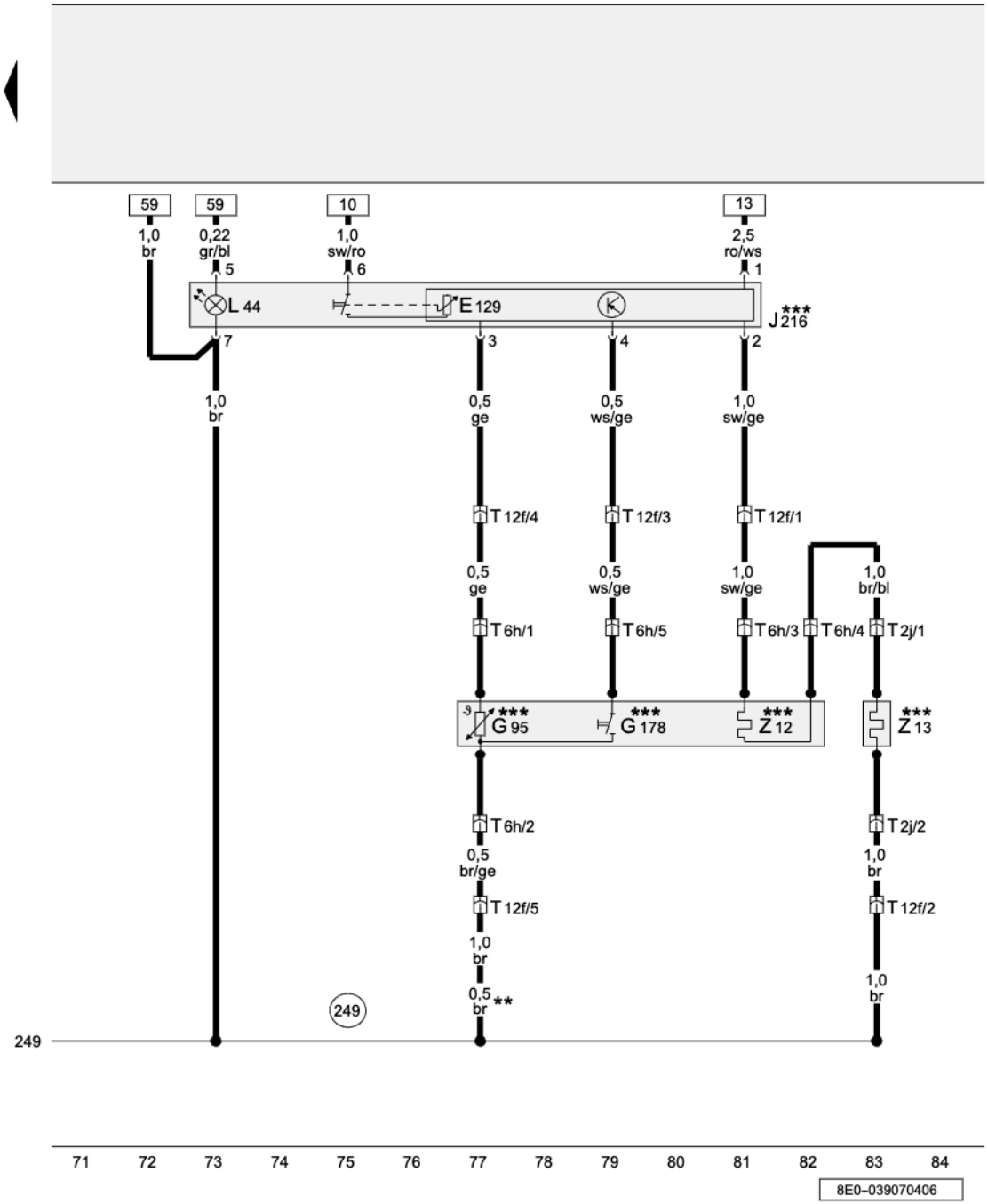

Right Rear Seat Heating Element

E129	Right Rear Heated Seat Regulating Switch
G95	Right Rear Heated Seat Temperature Sensor
G178	Rear Seat Occupied Sensor (on front passenger's side)
J216	Right Rear Heated Seat Control Module
L44	Heated Seat Switch Illumination
T2j	Double Connector, on Right Rear Backrest Heating Element
T6h	6-Pin Connector, on right rear seat
T12f	12-Pin Connector, black, under rear seat
Z12	Right Rear Seat Heating Element
Z13	Right Rear Backrest Heating Element
249	Ground Connection 2 (in interior wiring harness)
**	from August 2004
***	with heated seat's rear only

Protected by copyright. Copying for private or commercial purposes, in part or in whole, is not permitted unless authorised by AUDI AG. AUDI AG does not guarantee or accept any liability with respect to the correctness of information in this document. Copyright by AUDI AG.

ws	=	white
sw	=	black
ro	=	red
br	=	brown
gn	=	green
bl	=	blue
gr	=	grey
li	=	lilac
ge	=	yellow
or	=	orange
rs	=	pink